HOIMA DIOCESE EXAMINATION BOARD

PRIMARY SEVEN MOCK EXAMINATION, 2022

Mathematics

Time Allowed: 2 hours 30 minutes

Index no. | | | | | | | | | |

Candidate's Name.....

Candidate's Signature.....

School Name.....

District.....

Reading the following instructions carefully:

1. This paper has two sections **A** and **B**
   Section **A** has **20** questions and section **B** has **12** questions.
2. Answer **all** questions. **All the working for both sections A** and **B** must be shown in the space provided
3. All answers **must** be written using a **blue** or **black** ball point pen or **ink**. Any work done in pencil other than graphs and diagrams will **not** be marked.
4. Unnecessary **changes** in your work and handwriting that cannot be read may lead to **loss of marks.**
5. **No calculators are allowed in examination room**
6. Do not fill anything in the boxes indicated **"For Examiner's Use"** only and boxes inside the question paper

FOR EXAMINERS' USE ONLY		
Qn.NO.	**MARKS**	**EXR'S NO**
1-5		
6-10		
11-15		
16-20		
21-22		
23-24		
25-26		
27-28		
29-30		
31-32		
TOTAL		

©2022 *Hoima Diocese Examination Board*

SECTION A:

1. Workout 412
+124

2. Solve for k: 10k + 6 = 36

3. Simplify: $\frac{4}{9} + \frac{1}{3}$

4. Describe the un shaded region in the diagram below.

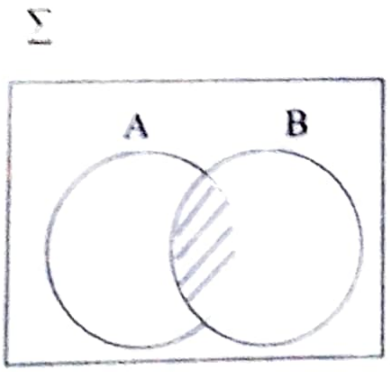

5. Write 55.555 in words

6. Work out (58 x 326) – (126x 58) using the distributive property.

7. Express $33^1/_3\%$ as a fraction

8. Bisect line segment AB below

9. Subtract $1101_{two} - 110_{two}$

10. 8men take 2days to dig a garden. How many more men are needed to do the same piece of work in 1 day?

11. Find the value of n: $2^n \times 2^2 = 8$.

Turn Over

12. Work out the different between the largest and the smallest 3-digit numeral formed using digits 8,0 and 6

13. Calculate the average of 2y, 0, 4, 3y and 6.

14. Write CCXLIX in Hindu-Arabic numerals.

15. Calculate the total distance around the figure below. Use $\pi = \frac{22}{7}$

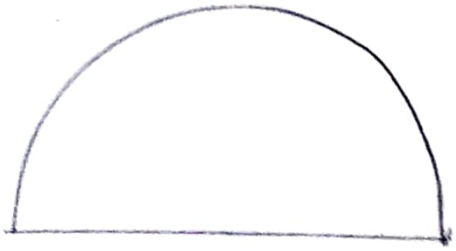

28cm

16. Work out the square root of 625.

17. Using a ruler, pencil and a pair of compasses only construct an angle of $22\frac{1}{2}^{0}$ in the space below.

18. A dozen of books cost sh.4800. Find the cost of 3 similar books.

19. Work out 2+3 = _____ dial 5

20. Aman deposited shs 300,000 In a bank which offers an interest rate of 2% per month. Calculate the amount he got after a period of 2years.

Turn Over

SECTION B

21. The Venn diagram below shows the number of farmers who grow beans(B) and maize(M) in a group of 50 farmers. Study it and answer questions that follow.

$n(\xi) = 50$

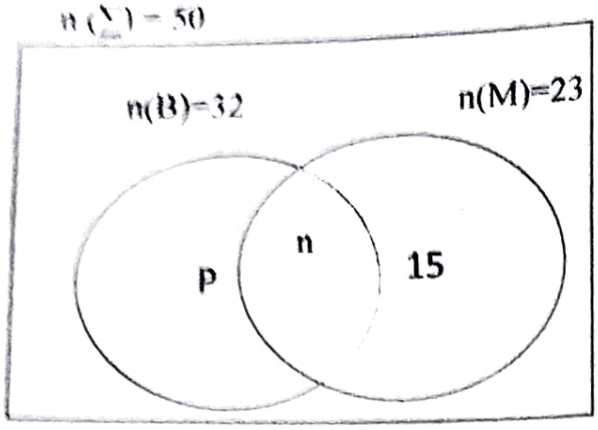

(a) Find the value of n. (2marks)

(b) How many farmers grow beans only? (2marks)

(c) If a farmer is picked at random, what is the probability that he grows only one type of food. (1mark).

22. On animal farm, $\frac{2}{3}$ of the animals are cows, 25% of the remainder are goats and the rest are sheep. If there are 40 sheep on the farm, how many animals are there altogether? (4marks)

23.(a) Simplify. $\frac{7.16 \div 1.64}{0.16 \times 1.1}$ (3marks)

(b) Express the recurring decimal 0.5454.... as a common fraction. (2marks)

24.In the diagram below $\overline{PR}$ is parallel to $\overline{KN}$ and LQ =QM.
Study it carefully and use it to answer questions that follow

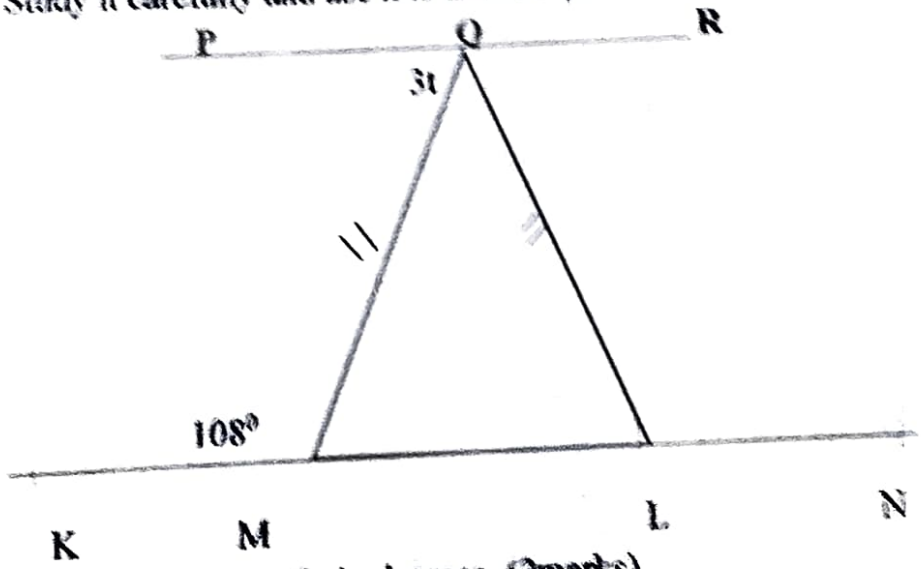

(a) Find the value of t in degrees. (2marks)

Turn Over

(b) Work out the size of angle MQL (3marks)

25. Study the exchange rates below as per 16th June, 2015

Currency	Buying rate (ug-shs)	Selling rate (ug-shs)
1 US dollar – USD ($)	3100	3200
1Pound sterling (£)	5000	5200
1 euro(euro)	3600	3700
1 kenya sh(k.sh)	1.4	1.5

(a) Batwine had Ug shs 188,800 and exchanged it for united states dollars (USD). How many US $ did he get? (2marks)

(b) If Kalema had 30pound sterling, and was to exchange it for Kenya Shs. How much money in Kenya shs did he receive? (3marks)

As Study the figure below

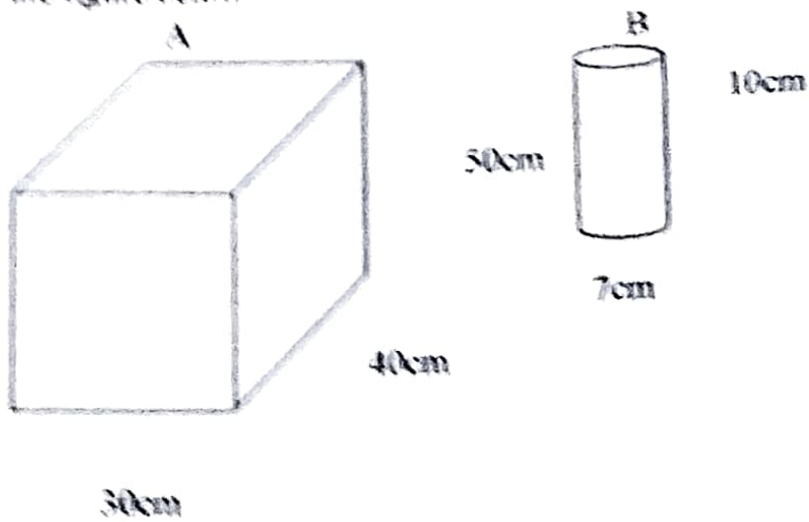

Small tins **B** are to be packed in a big box **A**. How many tins can fit in the first layer?

(2marks)

(a) Calculate the volume of space left after packing in the tins completely.

(4marks)

Turn Over

27. Using a pair of compasses, a ruler and a pencil only, construct a parallelogram ABCD such that Angle ABC= 60^0, line BC = 8cm and line BA = 6cm. Drop perpendicular from A to meet line BC at 0 and measure AO. (4marks)

(b) Find the area of the figure. (2marks)

28.Study the number line below and answer questions that follow

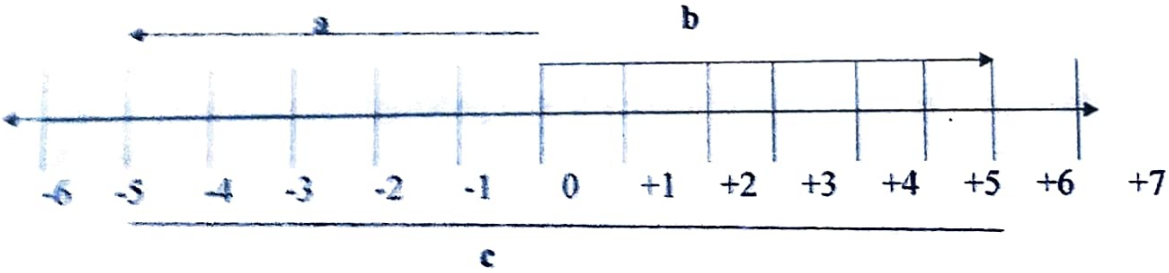

I. Write down integers represented by the letters (1mark each)

a) .....

b) .....

c) ....

II. What mathematical statement has been shown on the number line above? (1mark)

29. The table below shows the marks scored by a pupil in a set of exams. Use it to answer questions that follow:

SUBJECT	ENG	MTCS	SST	SCIE
MARKS %	80	60	90	70

(a) Find the total marks scored by a pupil in all the subjects (1mark)

(b) Use the above information to construct a pie chart of radius 3.5cm (4marks)

30. The head teacher of a certain school was to seat visitors. By seating them in fours, one could remain. By seating them in nines, six could remain and by seating them in fives, three could remain. How many visitors was the head teacher to seat? (3marks)

(c) What type of year was 1968?

Turn Over

31. A motorist left Kampala for Jinja at 8:00am reaching Jinja 180km away at 9:30am. The same taxi left Jinja for Kampala at 10:00am and arrived at Kampala at 11:30am.

(a) What was his speed from Kampala to Jinja? (2marks)

(b) Calculate its average speed for the whole journey. (3marks)

32. a) Given that a = 2b and b = 3. Find the value of 2b + 5a (2marks).

b) A mother is 4 times as old as her daughter. In 12 years time, the mother will be twice as old as the daughter. How old is each of them now? (4marks)

END